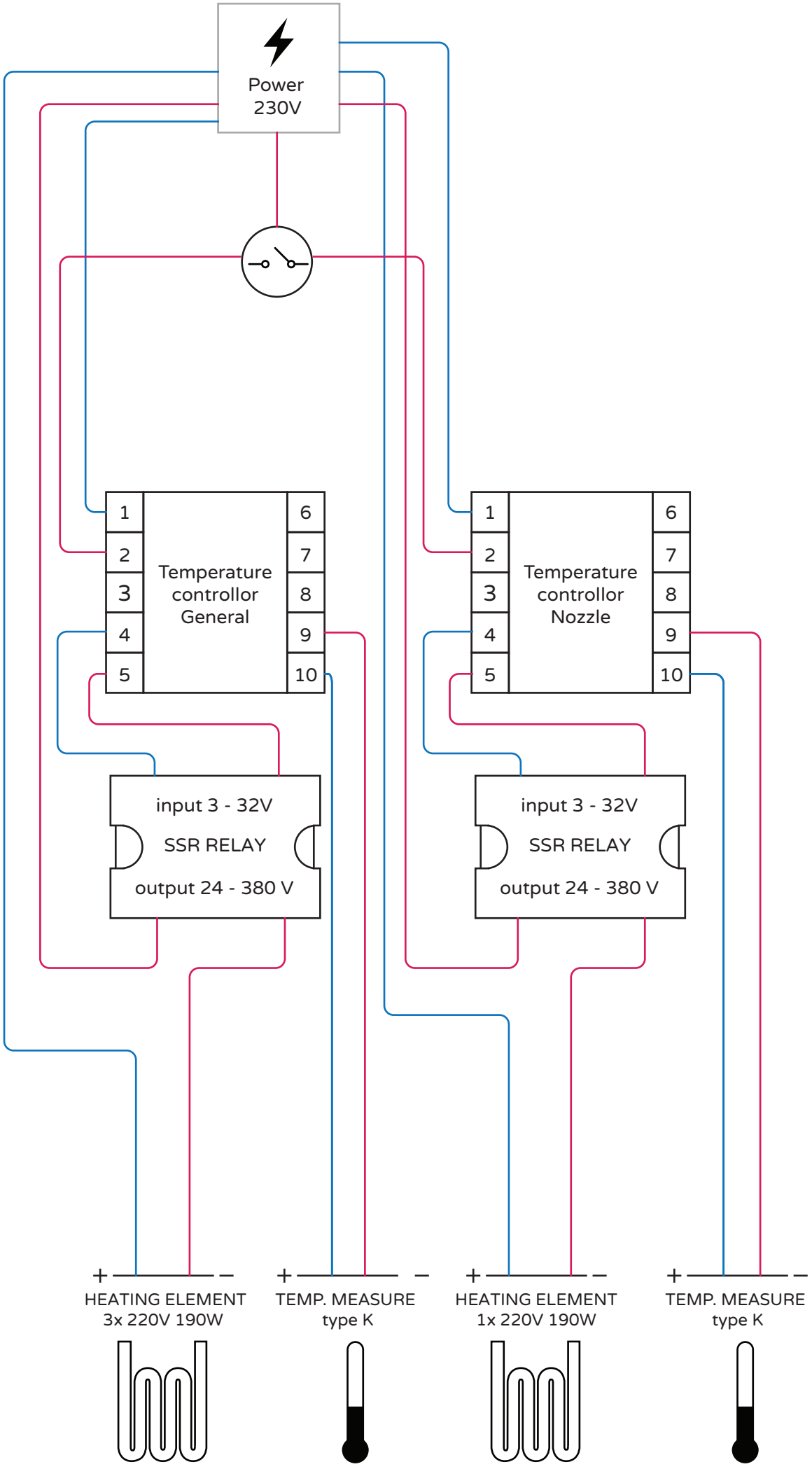
Power
230V
1
2
3
4
5
6
7
8
9
10
Temperature
controllor
General
1
2
3
4
5
6
7
8
9
10
Temperature
controllor
Nozzle
input 3 - 32V
SSR RELAY
output 24 - 380 V
input 3 - 32V
SSR RELAY
output 24 - 380 V
+
–
HEATING ELEMENT
3x 220V 190W
+
–
TEMP. MEASURE
type K
+
–
HEATING ELEMENT
1x 220V 190W
+
–
TEMP. MEASURE
type K